LEVELING SOLUTIONS 74445
INSTALLATION INSTRUCTIONS

Thank you for choosing our air helper kit. It will improve the overall handling and comfort of your truck and provide trouble free service with proper installation. Please take a few minutes to read through and follow the instructions to identify the components by comparing the parts in your kit with the parts list below.
Please keep in mind that the air springs must expand during operation, so be sure that there is enough clearance to do so without rubbing against any other part of the vehicle. Air springs are the most important part in this kit so be sure that they have enough space and properly installed. Be sure to take all applicable safety precautions during the installation. The instructions listed in this document and the illustrations show the left, or driver's side of the vehicle. To install the passenger side simply follow the same procedures. Your kit includes two sets of inflation valves and air lines for each air spring. This will allow you to level your vehicle from side to side as well as from front to back.

IMPORTANT!

- Do not exceed the maximum load recommended by the vehicle manufacturer (GVWR). Maximum inflation pressure of 100 psi may allow you to carry a load that might exceed this causing possible damage to your vehicle and jeopardize your safety. We recommend you to have your vehicle weighed once it is completely loaded and compare that weight to the maximum allowed. Check your vehicle owner's manual or data plate on driver's side door for maximum loads listed for your vehicle. When inflating your Air Springs, add air pressure in small quantities and check pressure frequently during inflation. The air springs inflate much quicker since they require much less air volume than a tire.
- Do not inflate the air springs without restricting/securing the whole kit. The kit assembly must be restricted by the suspension or other adequate structure.
- Do not inflate beyond 100 psi. Improper use or over inflation may cause property damage or severe personal injury.

PARTS LIST:

AIR SPRING	TR6410	2	3/8"-16 FLANGE LOCK NUT	8
UPPER BRACKET		2	1/4"-20 FLANGE NUT	2
LOWER BRACKET		2	5/8"-18 JAM NUT	2
EXTENSION BRACKET		1	5/8" FLAT WASHER	2
1/2" BRACKET STRAP		4	5/16" FLAT WASHER	4
TUBING		1	1/4" LOCK WASHER	2
3/8"-16 x 3-1/2" CARRIAGE BOLT		8	1/4" FLAT WASHER	4
1/4"-20 x 1" HEX BOLT		2	ELBOW FITTING	2
3/8"-16 x 3/4" FLANGE BOLT		2	INFLATION VALVE	2
NYLON TIES		6	THERMAL SLEEVE	2

TR2445

KIT TO FRAME ASSEMBLY

NOTE: Both illustrations are of the left, or driver's side of the vehicle. Reverse any orientations when assembling and installing the right, or passenger's side of the vehicle.

FIGURE "A"

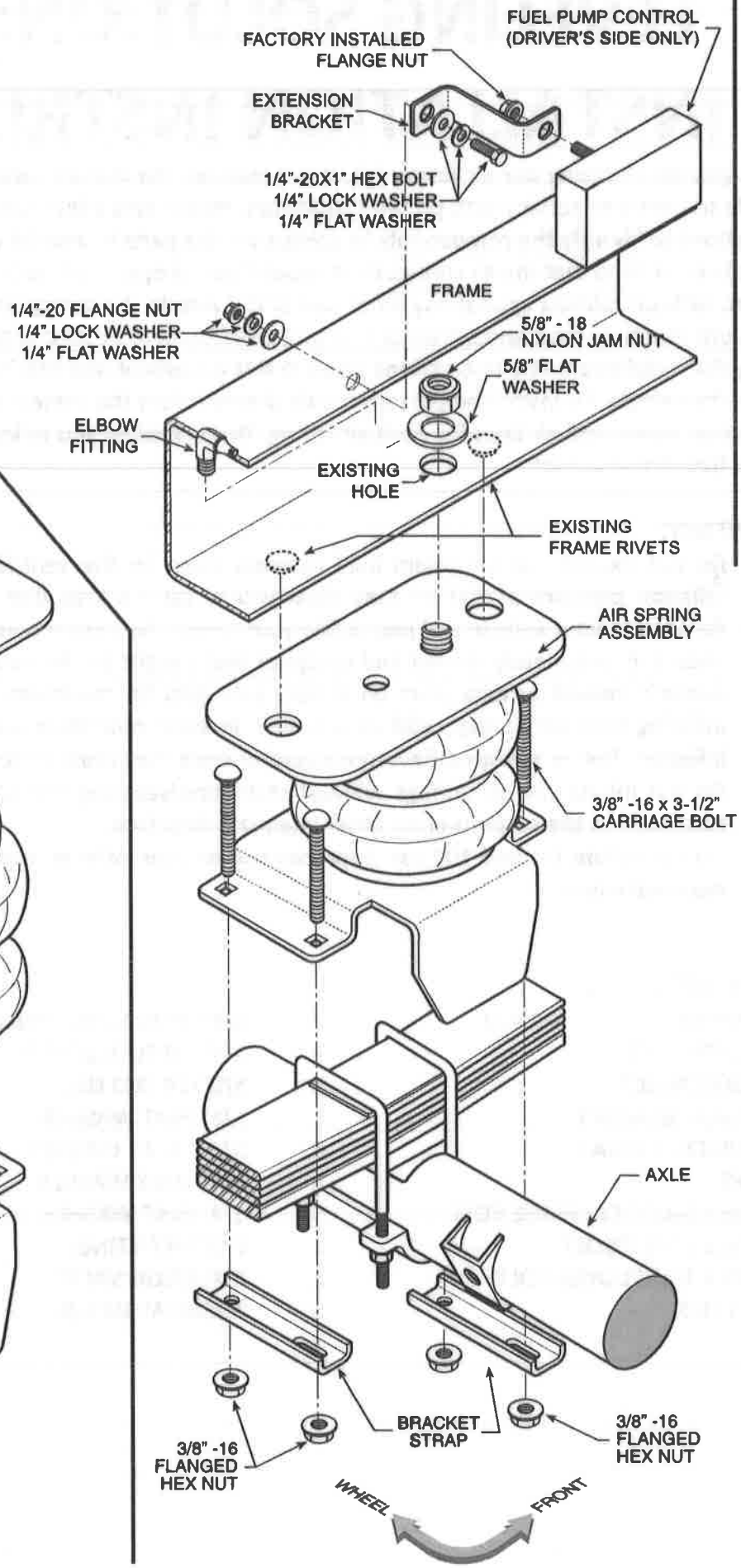

KIT ASSEMBLY

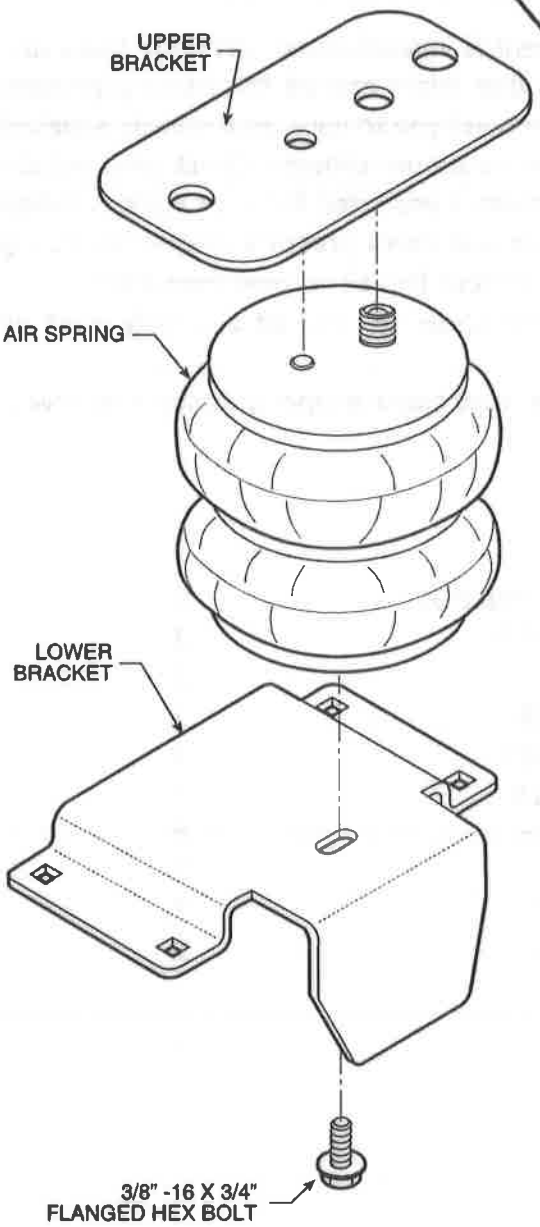

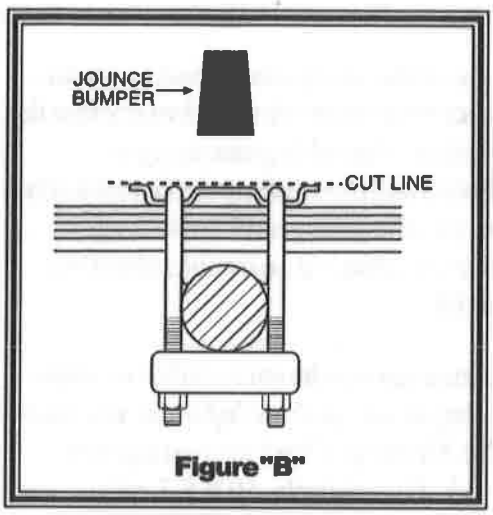

Figure "B"

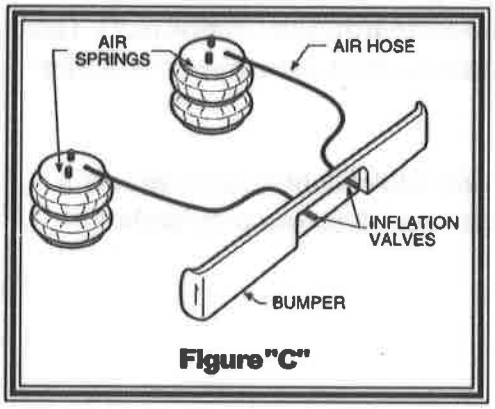

Figure "C"

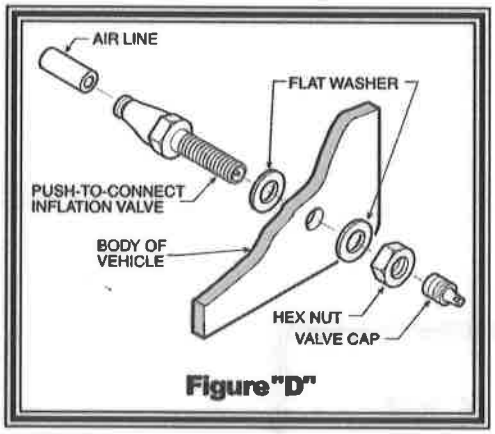

Figure "D"

STEP 1 - PREPARE THE VEHICLE

Place the vehicle on a solid level surface. Take necessary safety precautions such as using wheel chocks when working under your vehicle. Remove the jounce bumpers by cutting them off as close to the bracket as possible as shown in ***Figure "B"***. Next, remove the two nuts on the fuel pump control. ***NOTE:*** Some in-bed hitches have holes in the side plate to accept the fuel pump control. Attach the extension bracket to the fuel pump control using the factory flange nuts. The fuel pump control will be reinstalled at the end of Step 3. ***See Figure "A".***

STEP 2 - PREASSEMBLE THE KIT

Select an upper bracket and an air spring from your kit. Place the bracket on top of the air spring so the alignment pin inserts into the small middle hole, and the large combination stud inserts into the large middle hole. Attach the lower bracket to the air spring using the 3/8"-16 x 3/4" hex bolt. Tighten the bolt making sure the bracket is in the correct position ***(see Figure "A")***.

STEP 3 - INSTALL THE PREASSEMBLY TO THE VEHICLE

Place the preassembly on the leaf stack of the vehicle as shown in ***Figure "A"***. ***The emergency brake line bracket may need to be bent slightly for proper clearance.*** Align the two rivets on the bottom of the frame with the large holes on the outside of the upper bracket. Insert the large combination stud into the existing hole on the bottom of the frame. Install the 5/8" washer and the 5/8"-18 nylock jam nut onto the combination stud and tighten. ***See Figure "A"***. Install the elbow fitting into the air spring. Tighten the air fitting hand tight, then 3/4 of a turn with a wrench. ***DO NOT OVER TIGHTEN.*** If the nylon ring is crushed, it will cause an air leak. ***(see Figure "A")***. Attach the lower bracket to the leaf stack using the 3-1/2" carriage bolts, 3/8" lock nuts, and bracket straps as shown in ***Figure "A"***. Replace the fuel pump control on the frame using the 1/4"-20 x 1" hex bolt, lock washer, and flat washer through the extension bracket and the frame. Install the 1/4"-20 flange nuts, lock washers, and flat washers on to the 1/4" hex bolt on the outside of the frame. ***See Figure "A".***

Follow the same procedures as outlined in steps 1 through 3 for installing the right side of the vehicle.

STEP 4 - INSTALL THE AIR LINE

Uncoil the air tubing and cut it into two equal lengths. ***DO NOT FOLD OR KINK THE TUBING.*** The air line tubing should not be bent or curved sharply as it may buckle with age. Make the cut as square as possible. Insert one end of the tubing into the elbow fitting installed in the top of the air helper spring.

Select a location on the vehicle for the air inflation valves. The locations can be on the bumper or the body of the vehicle but be sure that it is in a protected location so the valve will not be damaged yet still be accessible for the air chuck ***(see Figure "C")***. Drill a 5/16" hole or use an existing hole and install the air inflation valve using two 5/16" stainless steel flat washers per valve as supports ***(see Figure "D")***. Run the tubing from the air spring to the inflation valve, routing it to avoid direct heat from the muffler or tailpipe, and away from sharp edges. Tubing protectors have been provided for these conditions. Push the end of the air line tubing into the inflation valve as illustrated ***(see Figure "D")***. Secure the tubing in place with the nylon ties provided.

STEP 5 - CHECK THE AIR SYSTEM

Once the inflation valves are installed, inflate the air springs and check the fittings for air leaks with an applied solution of soap and water. If a leak is detected at a tubing connection then check to make sure that the tube is cut as square as possible and that it is pushed completely into the fitting. The tubing can easily be removed from the fittings by pushing the collar towards the body of the fitting and then pulling out the tube. If a leak is detected where the fitting screws into the spring, screw the elbow into the spring until the leak stops. Reinflate the air helper springs and check for leaks as noted above. Further information on trouble-shooting can be found in the General Operation Instruction book included with this kit.

This now completes the installation. Before proceeding, check once again to be sure you have proper clearance around the bellows. ***With a load on your vehicle and the helper air springs inflated, you must have at least 1/2" clearance around the bellows.*** As a general rule, the Air Helper Springs will support approximately 32 lbs. of load for each p.s.i. of inflation pressure (per pair). For example, 50 P.S.I. of inflation pressure will support a load of 1600 lbs. per pair of air helper springs. FOR BEST RIDE use only enough air pressure in the air helper springs to level the vehicle when viewed from the side (front to rear). This amount will vary depending on the load, location of load, condition of existing suspension and personal preference.

NOTE: Too much air pressure in the helper springs will result in stiffer ride, while too little air pressure will allow the air spring to bottom out over rough conditions. Too little air pressure will also not provide the improvement in handling that is possible.

NOTE:

MIN PRESSURE	**5 PSI**
MAX PRESSURE (LOADED)	**100 PSI**

COMBO STUD NOTICE:

THE ALIGNMENT PIN ON THE AIR SPRING **MUST** BE INSTALLED INTO THE HOLE IN THE UPPER BRACKET.

FAILURE TO DO SO WILL CAUSE THE ALIGNMENT PIN TO BE PUSHED INTO THE BEAD PLATE, CREATING AN AIR LEAK, AND RESULTING IN AN AIR SPRING FAILURE THAT IS **NOT WARRANTABLE**.

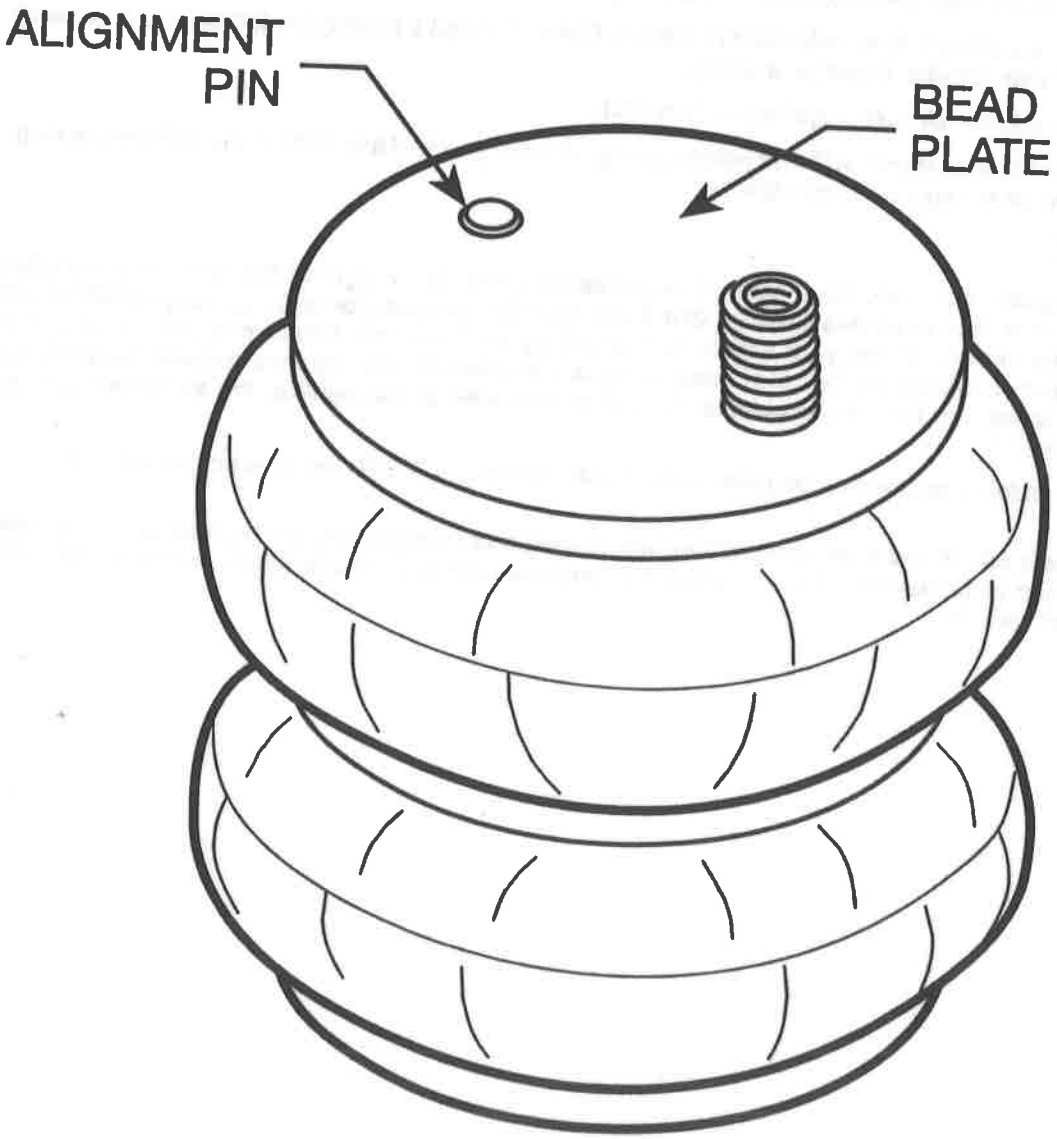

SAFETY TIPS

Never exceed the manufacturer's recommended Gross Vehicle Weight Rating (GVWR)

As with your vehicle's tires, an air helper spring is a pneumatic device that supports a portion of the vehicle's weight. The air helper spring may fail as a result of punctures, impact damage, improper inflation, improper installation, or improper usage. To reduce the risk of failure, we strongly recommend the following:

Never overload your vehicle. The manufacturer's gross vehicle weight rating (GVWR) is stated on the specification plate on the chassis. You should weigh your vehicle on a truck scale when it is fully loaded and in a level condition to determine if your are exceeding the manufacturer's recommended GVWR.

Inspect the inflated air springs to verify that they do not contact any component of the vehicle under normal suspension operation. The air helper spring must flex and expand during normal operation. There must be at least 1/2" of clearance between the inflated air spring and any other component of the vehicle under normal suspension operation.

Inspect the air line tubing and the air spring to verify that they have not been too close to the exhaust system. If the distance between any portion of the air spring or air line tubing and the exhaust system is less than 6", a heat shield should be used.

Never inflate the air helper springs beyond the maximum pressure indicated in the installation manual.

Never attempt to remove any component of the air spring assembly when the air springs are inflated.

If an air helper spring has failed while you are on the road, operate your vehicle at reduced speeds. High speed over rough roads will result in severe bottoming of the air spring and may damage other vehicle components.

Never attempt to drive the vehicle in an unleveled condition. Failure to level a heavily loaded vehicle may result in excessive body roll and possible damage or injury.

Never cut, weld, or modify the air helper springs or brackets.

Do not use aerosol tire repair products in the air helper springs or a tire patch of any kind on the air helper spring. If there is a hole in the air spring it must be replaced.

BASIC OPERATION

As your vehicle is loaded, the stock suspension is compressed under the weight of the load. Your vehicle's stock suspension system has been designed so that it will provide optimum performance and handling with a specific load on the vehicle. When your vehicle is loaded, its performance, handling characteristics, and ride quality may be compromised. As the stock suspension is compressed, the ride may become "mushy", and you may encounter sway and handling problems. As weight is added to the vehicle, the air helper springs become an active part of

*Do not exceed the vehicle's recommended gross vehicle weight rating (GVWR) the suspension system.

As more air pressure is added to the air springs, they will support more weight. You will be able to compensate for a heavy load by adding air pressure to the air springs, thereby reducing sway and handling problems associated with a heavily loaded vehicle.

TABLE "A"	
ALL TORQUE SPECIFICATIONS	
Using a torque wrench, torque the threaded fasteners to the following specifications:	
Fasteners used on studs and blind holes in air springs	15 – 20 ft lbs
Hex nuts installed on carriage bolts	10 – 15 ft lbs
Hex nuts installed on 3/8" hex bolts	28 – 32 ft lbs
Hex nuts and bolts used to secure brackets to frame	28 – 32 ft lbs
Hex nuts installed on U-bolts	15 – 20 ft lbs
Hex bolts securing tapered sleeve style air spring to lower bracket	10 – 12 ft lbs

PREVAILING-TORQUE LOCK NUTS

In order to assure trouble-free operation, your air spring kit includes a variety of self-locking threaded fasteners. Your kit may include prevailing-torque lock nuts. Prevailing-torque lock nuts may be more difficult to install, but will not come loose under normal suspension operation.

THREAD LOCKING COMPOUND

The hex bolts used to secure the air spring to the brackets may have a locking compound applied to the threads. Lock washers are not required when using a fastener with pre-applied thread locking compound. When installing fasteners with thread locking compound, follow the torque recommendations listed in table.

HELICAL LOCK WASHERS

Your air helper spring kit may include helical lock washers. In order to properly use the lock washer, tighten the nut/bolt fastener just enough to flatten the lock washer. Overtightening the fastener may damage the nut or bolt. When using helical lock washers, follow the torque recommendations listed in Table "A".

AIR FITTINGS

Your kit will include one of two types of push-to-connect air fittings: fittings with a thread locking compound pre-applied to the threads or fittings with a Nylon collar in place of the thread locking compound.

The pre-applied thread sealant, thread the air fitting into the air spring and tighten the fitting securely to engage the pre-applied thread sealant.

The Nylon collar, thread the air fitting into the threaded hole on the air spring so that the Nylon collar makes contact with the top of the air spring and then tighten 1/2 turn. No thread sealant is required.

Both types of air fittings allow easy connection between the air fitting and the air line tubing. To install the air line in the fittings, cut the tubing as square as possible using a sharp utility knife or razor blade. Push the air line into the fitting as far as possible. If the tubing must be removed from the fitting, first release the air pressure from the air spring. Push the collar towards the body of the fitting and then pull the tubing out.

PRESSURE DIFFERENTIAL BETWEEN AIR SPRINGS

It is not uncommon to have different pressures between the air springs after the vehicle has been brought to a level condition. If the vehicle is within the manufacturer's recommended gross vehicle weight and you have not achieved a level condition after inflating the air springs to 100 psi, there may be a problem with your stock suspension. The leaf springs may have become fatigued over time or a leaf spring may be fractured. There may be an obstruction in the air system, not allowing the air pressure to reach the air helper springs.

AIR SPRING ALIGNMENT AND HEIGHT

Upon completion of the installation, the air springs should be inspected for proper alignment. Although the air helper springs can function with some misalignment, it is preferred that the air springs be mounted so that they are aligned with as little top to bottom offset as possible.

Check the distance between the upper bracket and lower bracket (design height).

INFLATING THE AIR SPRINGS

With the air helper springs installed on your vehicle and the vehicle sitting on a level surface, visually verify that the vehicle is in a level state. If the vehicle is not level (front-to-back or from side-to-side) it can be brought to a level position by inflating the air springs. Each air spring has a separate inflation valve. To level the vehicle from front-to-back, add air pressure to both air springs in equal amounts. To level the vehicle from side-to-side, add more air pressure to the air spring on the lower side of the vehicle. When inflating the air springs, add air pressure in small quantities, checking the pressure frequently. The air spring requires much less air volume than a tire, and therefore, will inflate and deflate quickly.

WARNING: *DO NOT EXCEED THE MAXIMUM PRESSURE AS INDICATED IN THE INSTALLATION MANUAL*

.

LEVELING THE VEHICLE

Check the level of your vehicle visually. If it is not level, either from front to back or from side to side, level it by inflating your air springs. (If your vehicle is equipped with a cab control unit or automatic control system refer to the directions for that device.) There is one inflation valve for each air spring. To level from front to back, add air pressure to both air springs equally. For side to side, add air pressure to the air springs on the side of the vehicle that is low. When adding air pressure to the air springs, remember that they have a much smaller volume of air that a tire so they will inflate much quicker. Add air pressure in short bursts until the vehicle is level. (NEVER EXCEED 100psi IN EACH AIR SPRING.)

MAINTENANCE

It is considered normal for air helper springs to lose some air pressure over time. Normal pressure loss should not exceed 3 – 4 psi per week when the air springs are inflated to 50 psi. If the pressure loss is greater than 3 – 4 psi per week, there may be a leak in the system. Each time you check the pressure in the air springs, you will lose 1 – 3 psi. The air pressure should be checked at regular intervals.

It is recommended that the air pressure be checked according to the following guidelines:

At least monthly intervals during the continuous operation of the vehicle (see above)

When the vehicle is removed from long-term storage

If the air springs are used to assist in leveling an RV or camper on uneven ground, ensure that the vehicle is returned to a level ride height before departing.

The brackets used to secure the air helper spring to the vehicle should be inspected periodically for damage and for loose fasteners. Ensure that the air line tubing is clear of any sharp edges and routed away from the exhaust system. The brackets and air line tubing should be inspected every 6 months.

Accumulated sand, gravel, or other road debris on the air springs or brackets should be rinsed away with a garden hose each time the vehicle is washed.

If it is necessary to lift the vehicle by the frame, first release the air pressure from the air springs. This will allow the air springs to extend to their maximum length without being damaged. The uninflated air springs are capable of supporting the weight of the axle when the vehicle is lifted by the frame. After servicing of the vehicle is complete, lower the vehicle to the ground and reinflate the air helper springs to the desired pressure.

TROUBLE SHOOTING GUIDE

Air spring will not inflate

Ensure that the air line tubing is inserted into the air fittings as far as possible. The tubing should go in the fitting 3/4 of an inch. You will feel some resistance when the tubing goes past the o-ring.

Clear any dirt of debris from inside the inflation valves.

Inspect the entire length of air line tubing to ensure that it is not kinked, damaged from exhaust heat, or cut due to contact with sharp edges

Air spring will not hold air

Normal pressure loss is no more than 3 - 4 psi per week when the air spring is inflated to 50 psi.

Using the inflation valve cap as a core tool, ensure that the valve stem core is installed securely.

Apply a solution of soap and water to the air fittings, air line, and air springs to check for leaks. Tighten the air fitting or re-install the tubing in the air fitting to stop the leak. Rinse the soap and water solution from the system when complete.

If a leak can not be detected with the soap and water solution, deflate the air springs and remove them from the vehicle. Re-install the tubing and inflation valve on the air spring and inflate the air spring to a maximum of 20 psi. Submerge the air spring in a bucket of water to check for leaks.

Locations of air leaks

Leaks occur most often at the threaded connection between the air fittings and the air springs. Tighten the fitting to engage the pre-applied orange thread sealant or until the nylon collar makes contact with the air spring, plus 1/2 turn, depending on which type of fitting is included in your kit. (See air fittings on page 3)

The end of the air line tubing must be cut square and clean to avoid burrs in the connection to the air fittings. The push-to-connect fittings require a square cut to properly seal. The tubing can be removed from the fitting by first releasing the air pressure from the air spring. Push the collar on the fitting toward the body of the fitting. While holding the collar in, pull out the tubing. Cut the tubing squarely and push the tubing into the fitting as far as possible.

The vehicle is not level

Check for proper inflation of the air springs on each side of the vehicle.

Check for obstructions in the air system or vehicle components that may be restricting suspension travel.

IMPORTANT

NYLON TUBE CUTTING:

FOLLOW THESE INSTRUCTIONS TO AVOID LEAKS